Quick Start Guide

Sno-Tek 20R (939401 s/n 75000 & up)

- Step 1: Unfold Handlebar
- Step 2: Install Discharge Chute
- Step 3: Install Discharge Chute Crank
- Step 4: Check Function of Dual Handle Interlock
- Step 5: Check Tire Pressure
- Step 6: Adjust Skid Shoes
- Step 7: Check Auger Gearcase Oil
- Step 8: Check Engine Crankcase Oil
- Step 9: Fill Engine Fuel Tank
- Step 10: Start Engine
- Step 11: Stop Engine

READ AND UNDERSTAND ALL INSTRUCTION, WARNING, AND DANGER LABELS. **IMPORTANT:** READ OPERATOR'S MANUAL AND ENGINE MANUAL THOROUGHLY AND FOLLOW THE IMPORTANT SAFE OPERATION PRACTICES BEFORE OPERATING.

Step One:
Unfold Handlebar

1. Remove the lower and loosen the upper hardware on the handlebar assembly.
2. Rotate the handlebar into operating position.

NOTE: Be careful not to damage cable spring hooks when rotating handlebar upward.

3. Install and tighten the hardware on the handlebar assembly.

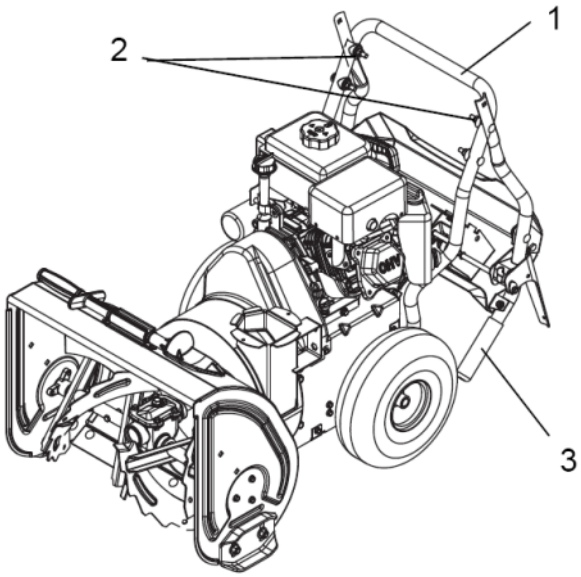

1. Lower Handlebar
2. Hardware
3. Upper Handlebar

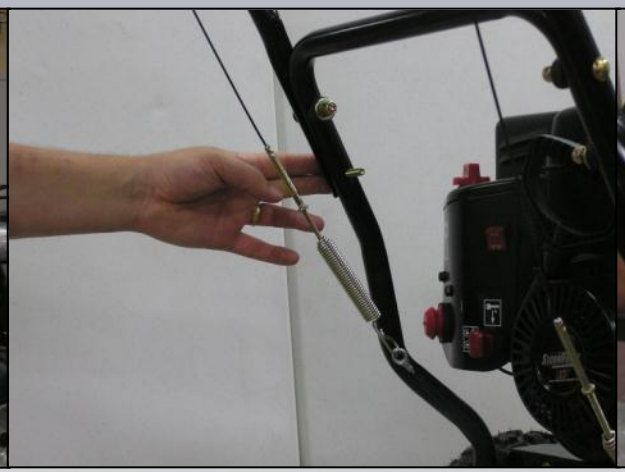

Step Two:
Install Discharge Chute

1. Remove mounting hardware from the auger housing.
2. Install discharge chute over opening in the auger housing and secure pedestal to auger housing with hardware removed above.

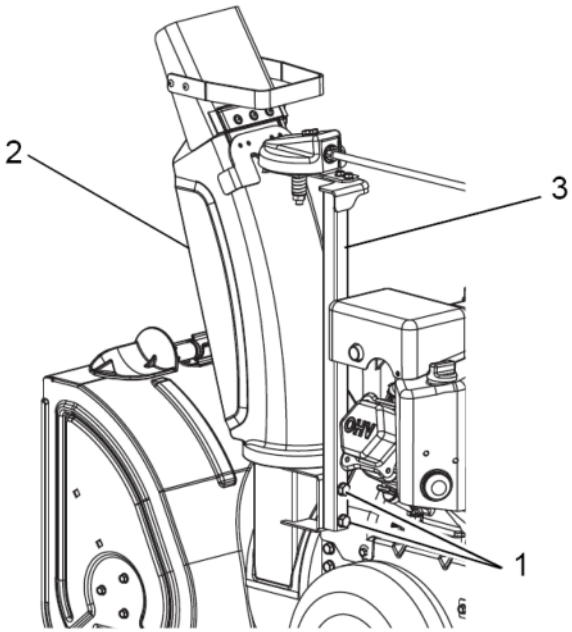

1. Mounting Hardware
2. Discharge Chute
3. Chute Pedestal

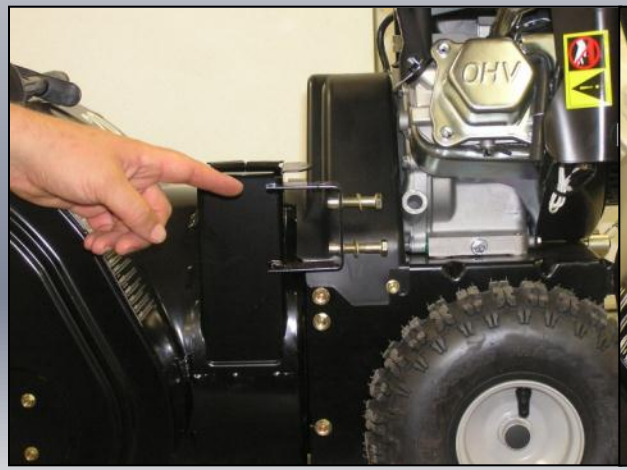

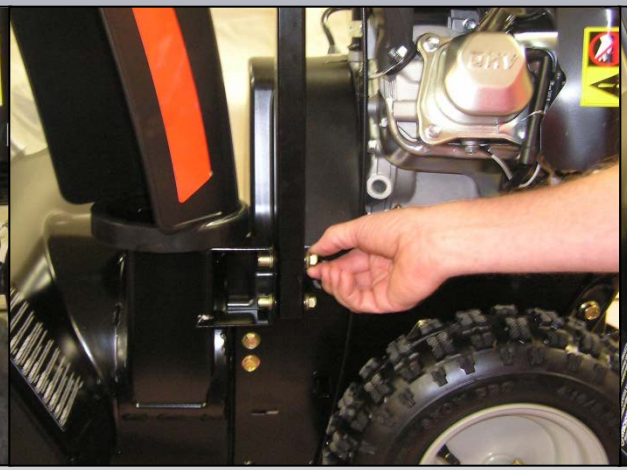

Step Three:
Install Discharge Chute Crank

1. Slide chute crank through crank support bracket.

NOTE: Be careful not to damage the nylon bushing when sliding crank through bracket.

2. Connect the chute crank to the pinion gear on chute with spring clip pin.

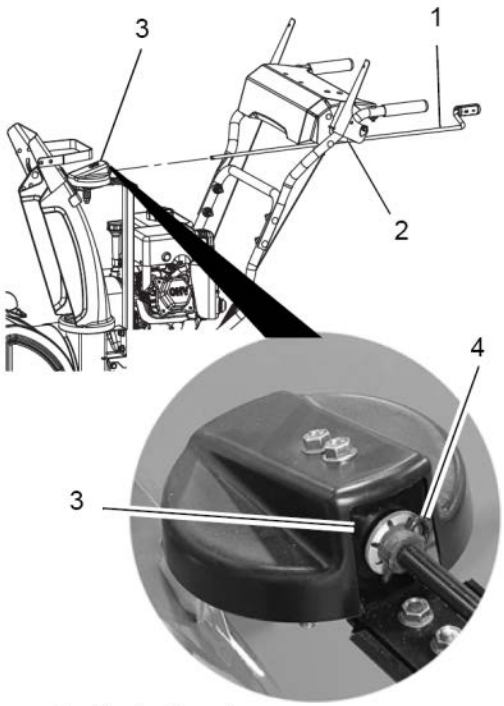

1. Chute Crank
2. Crank Support Bracket
3. Pinion Gear
4. Spring Clip

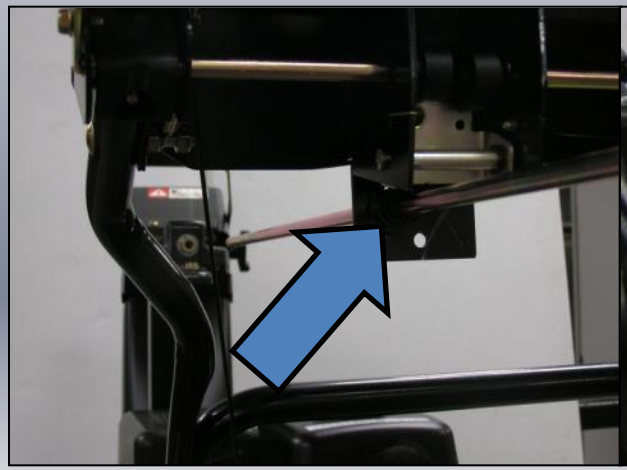

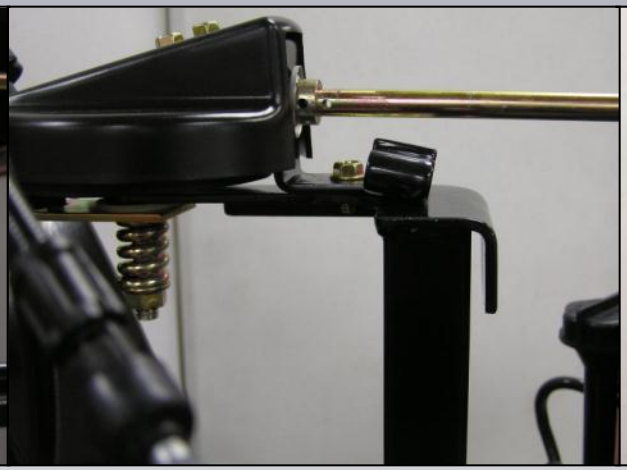

Step Four:
Check Function of Dual Handle Interlock

Without the engine running, press down (engage) both clutch levers. Release attachment clutch lever. Attachment clutch should remain engaged until traction clutch lever is released, then both clutches *must* disengage. If they do not, contact your dealer for repairs.

Step Five:
Check Tire Pressure

Check tire pressure and adjust to the pressure listed on tire sidewall.

Step Six:
Adjust Skid Shoes

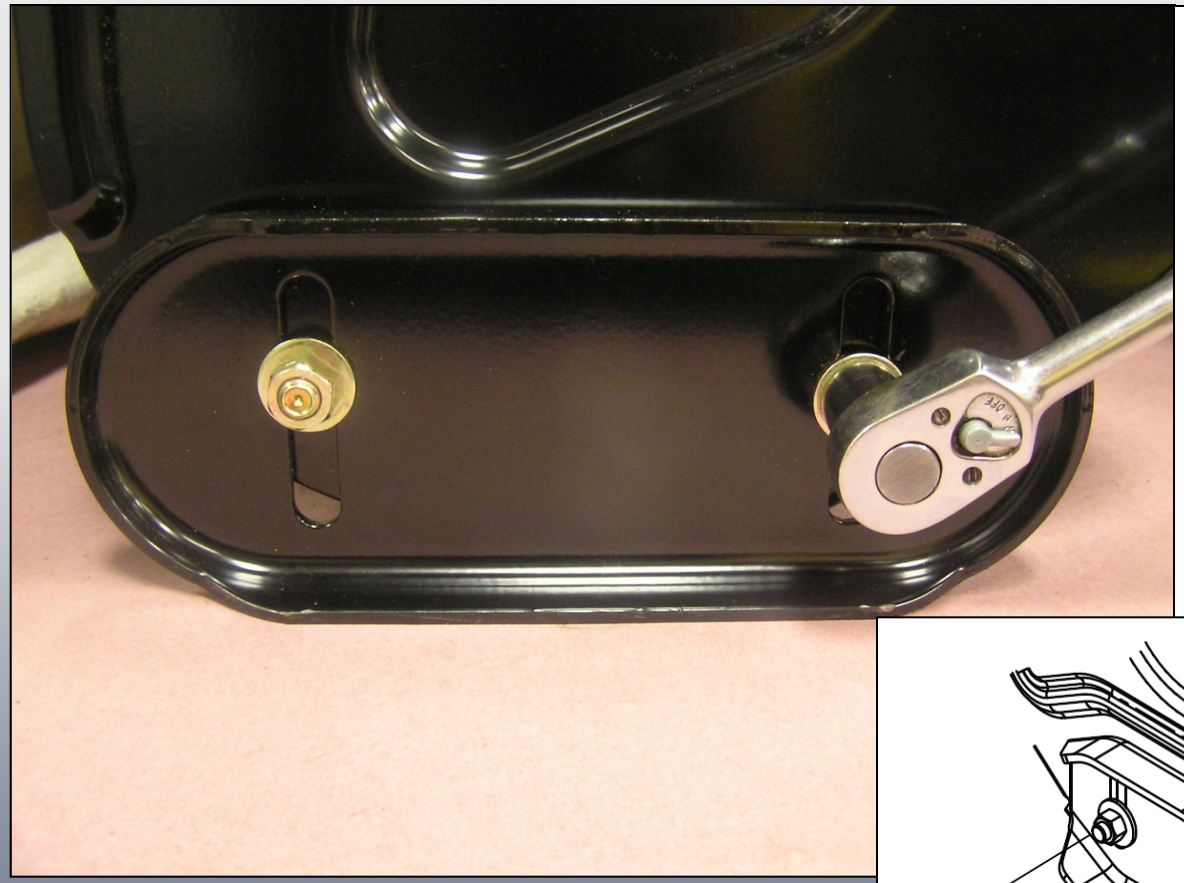

IMPORTANT: Skid shoes should be adjusted as conditions require. Allow 1/8 in. (3mm) between scraper blade and hard smooth surfaces. Allow 7/8 in. (22 mm) between scraper blade and uneven or gravel surfaces. (See *Skid Shoes* in Owners Manual).

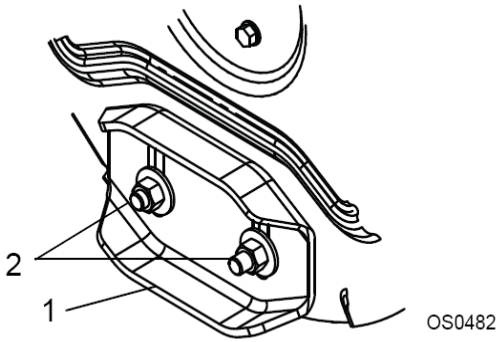

1. Skid Shoe
2. Skid Shoe Hardware

Step Seven:
Check Auger Gearcase Oil

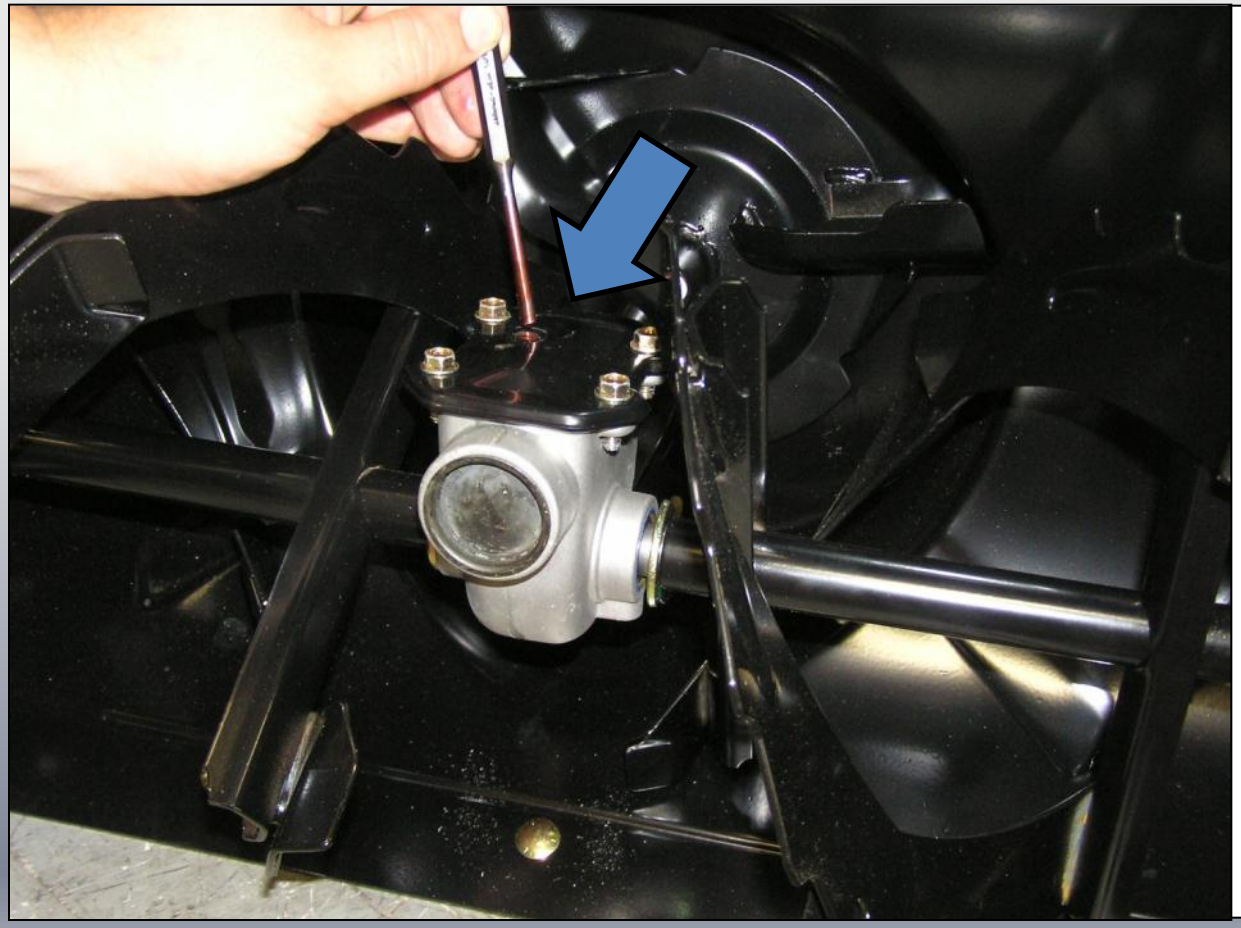

Check oil level in auger gearcase
(see *Check Auger Gearcase* in Owners Manual).

Step Eight:
Check Engine Crankcase Oil

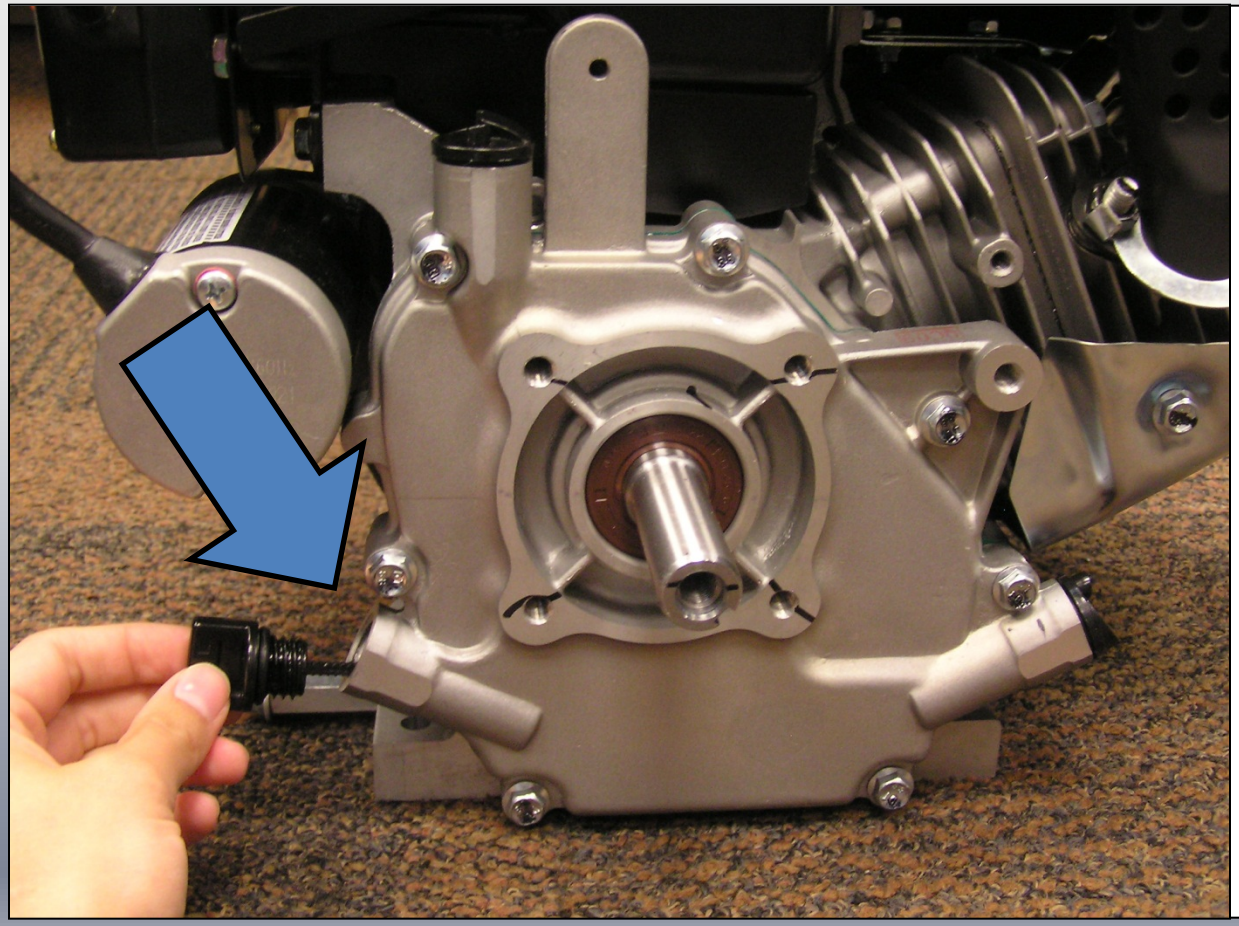

IMPORTANT: The engine is shipped with oil in crankcase. Refer to engine manual for detailed instructions.

Step Nine:
Fill Engine Fuel Tank

Fill fuel tank. DO NOT OVERFILL! See *FILLING FUEL TANK* in Owners Manual.

Step Ten: Starting the Engine

Starting Engine / Step A: Choke

Rotate choke Knob to START position.

Starting Engine / Step B: Rocker Switch

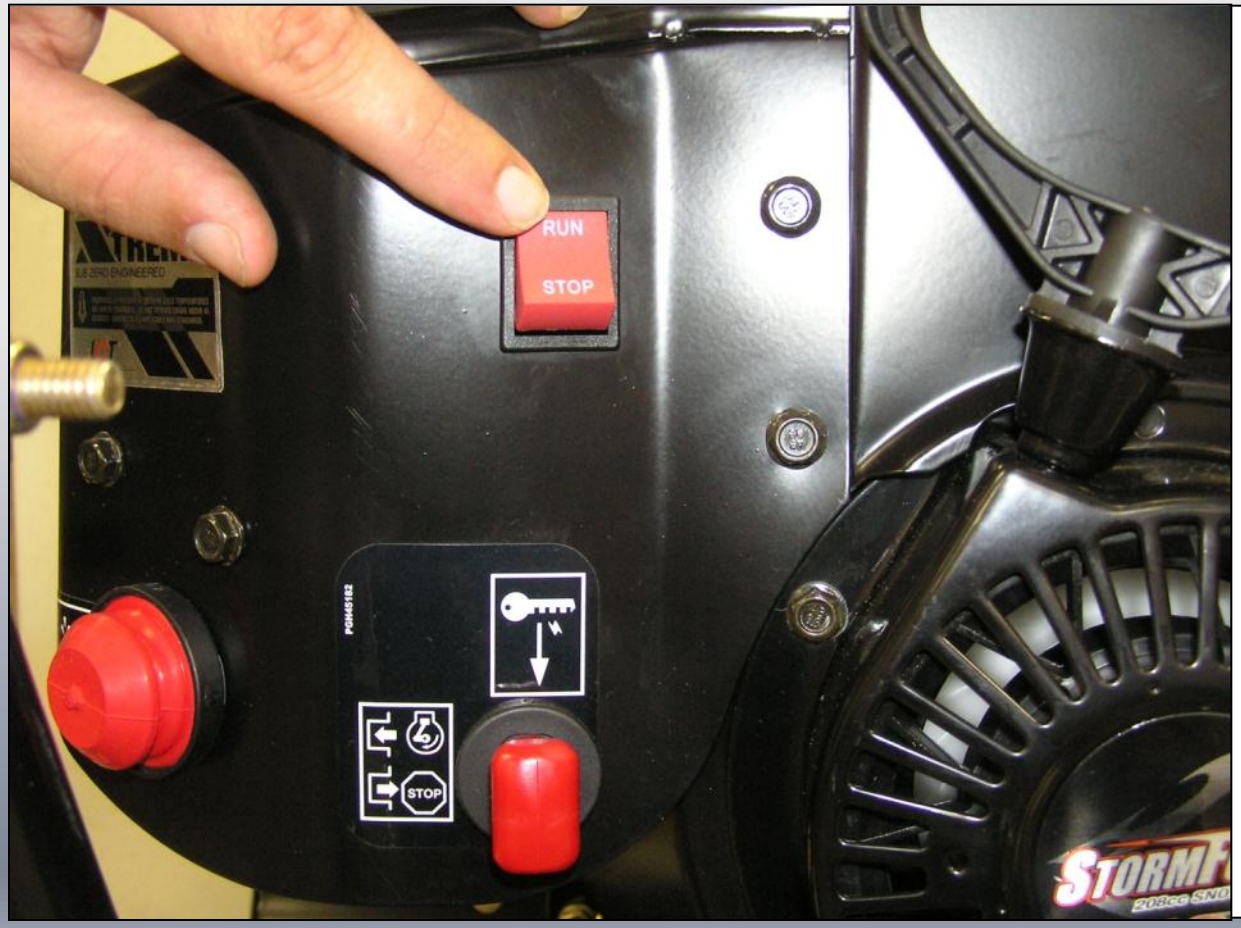

Select RUN on Run/Stop Rocker Switch.

Starting Engine / Step C
Fuel Shut Off Valve

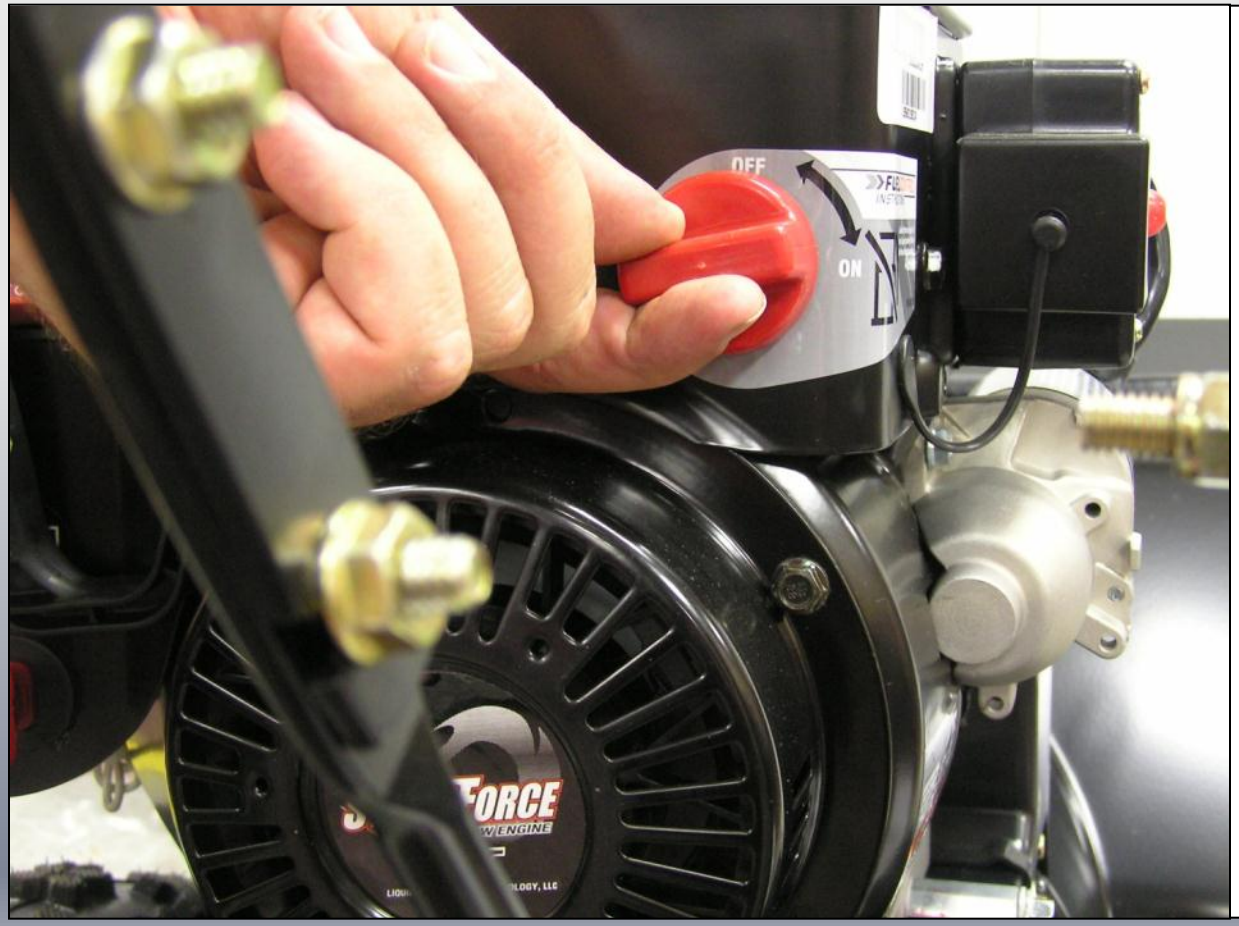

Rotate Fuel Control Knob to ON position.

Starting Engine / Step D: Key

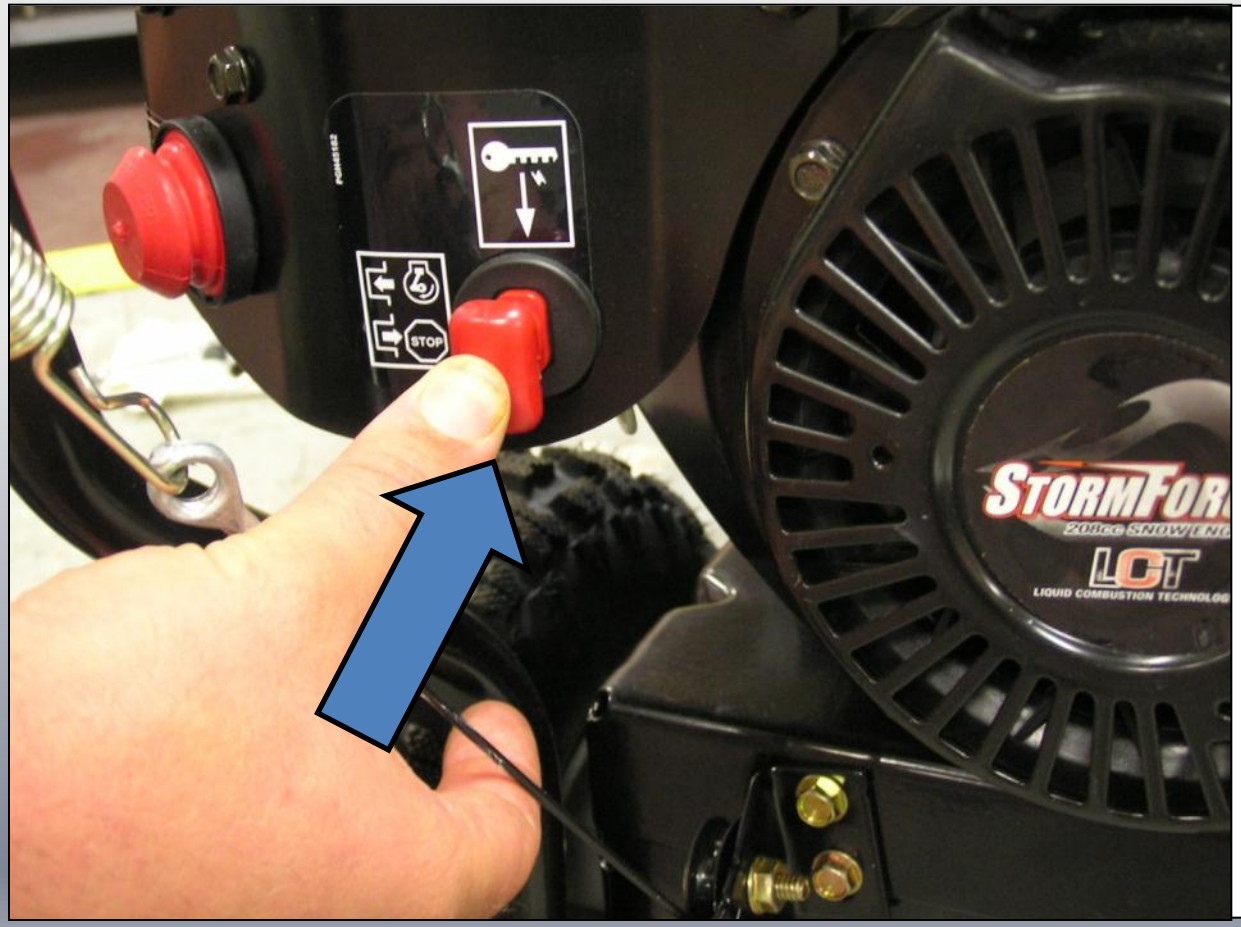

Install Safety Key Switch. Insert Safety Key Switch into slot (DO NOT TURN SAFETY KEY SWITCH). Be sure you feel a “snap” when Safety Key Switch is fully inserted.

Starting Engine / Step E: Prime

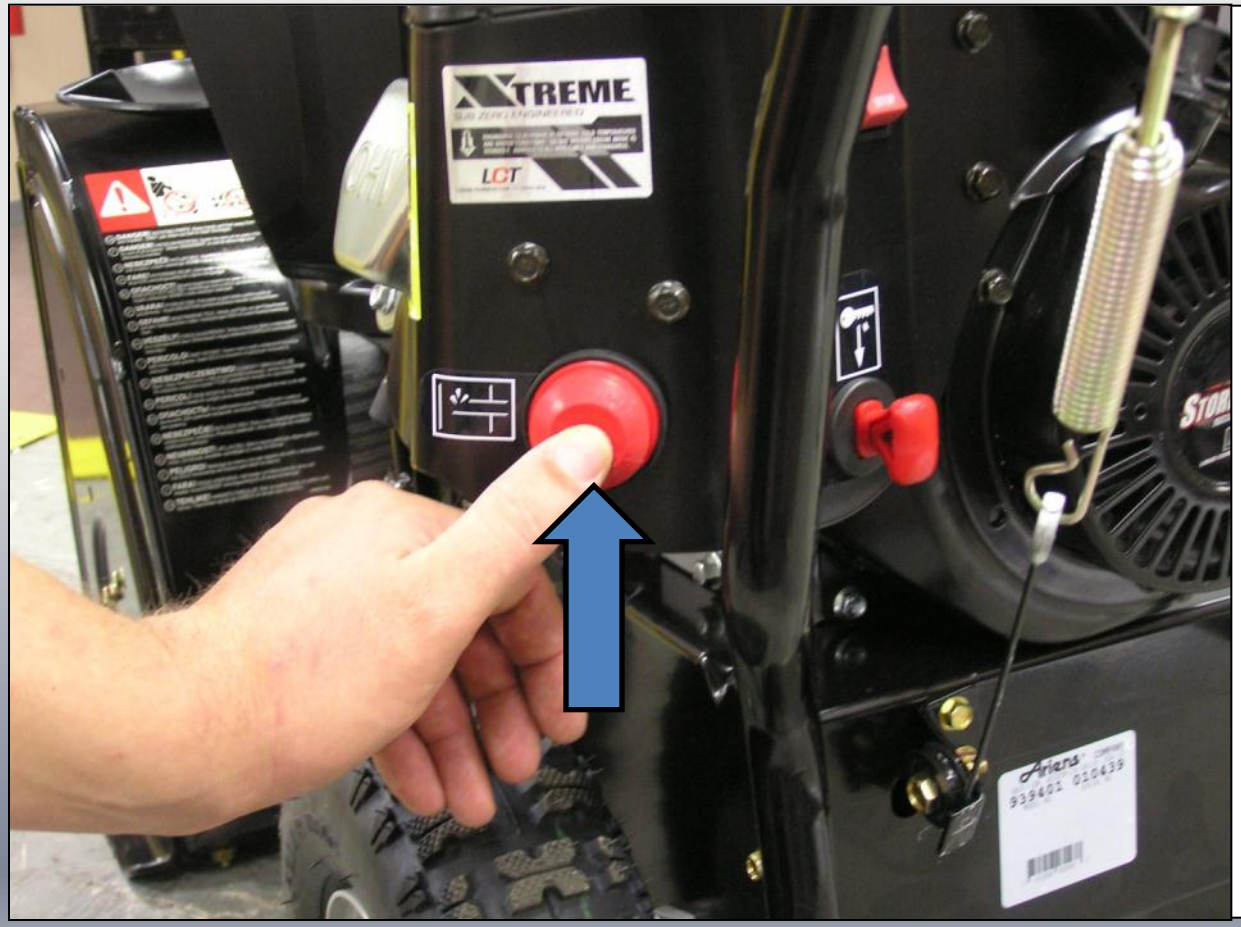

Prime system: 3 primes maximum. DO NOT over prime system. Make sure to cover the vent hole on primer bulb before the primer bulb is compressed. Hold the primer bulb in the compressed position for one full second each time you press it. Repeat for a total of 3 primes.

Starting Engine / Step F: (Manual Start)

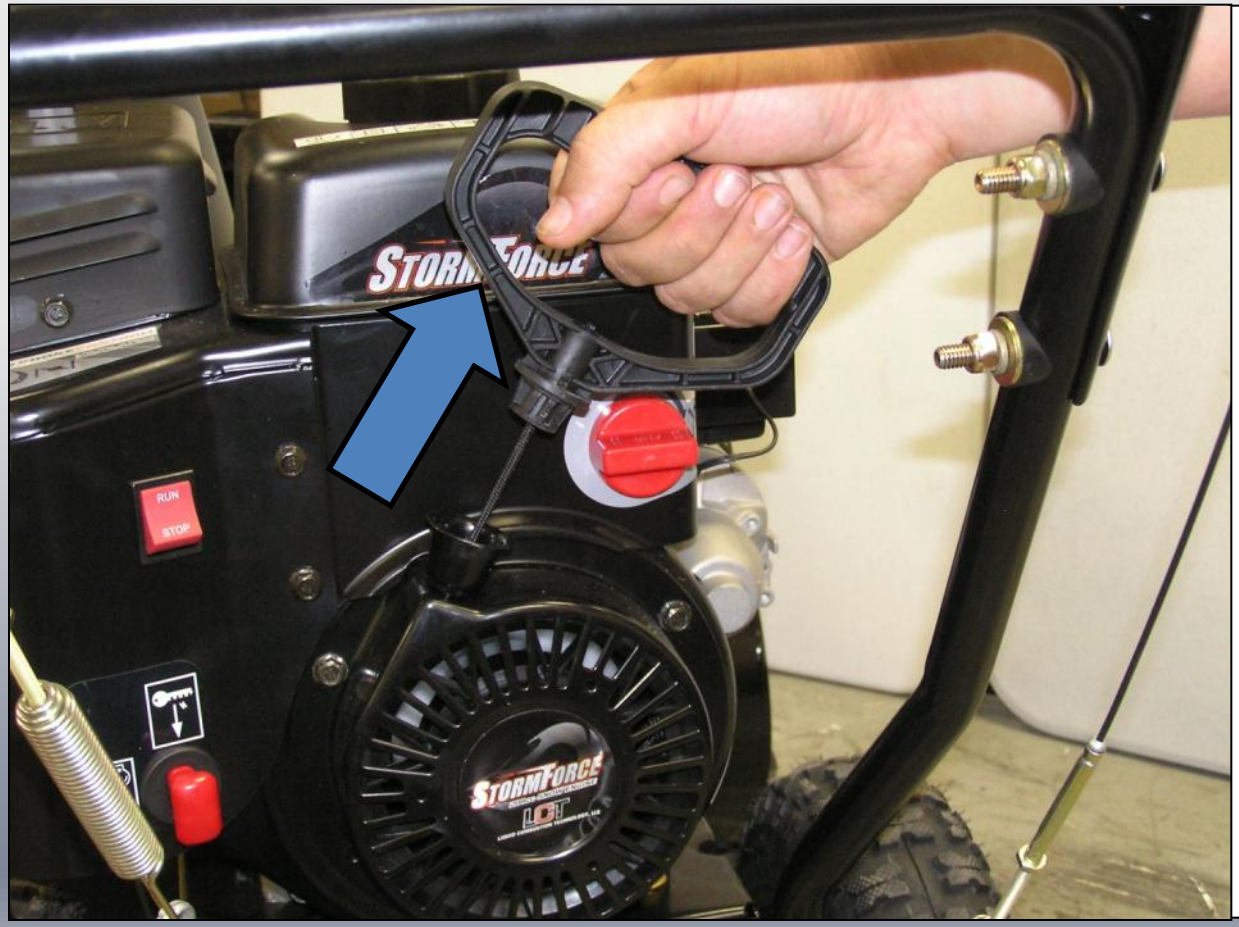

Grasp rope handle. Pull slowly until resistance is felt, then pull rope firmly and quickly to start engine and avoid kickback.

Starting Engine / Step F: (Electric Start)

Use a 3-wire extension cord and plug cord into starter motor adaptor first. Then plug cord into wall receptacle. Use appropriately sized extension cord (a minimum of 16 gage, 3-wire, 13 amp, no longer than 25 feet, and suitable for outdoor use) to prevent damage to electric starter.

Starting Engine / Step G: (Electric Start)

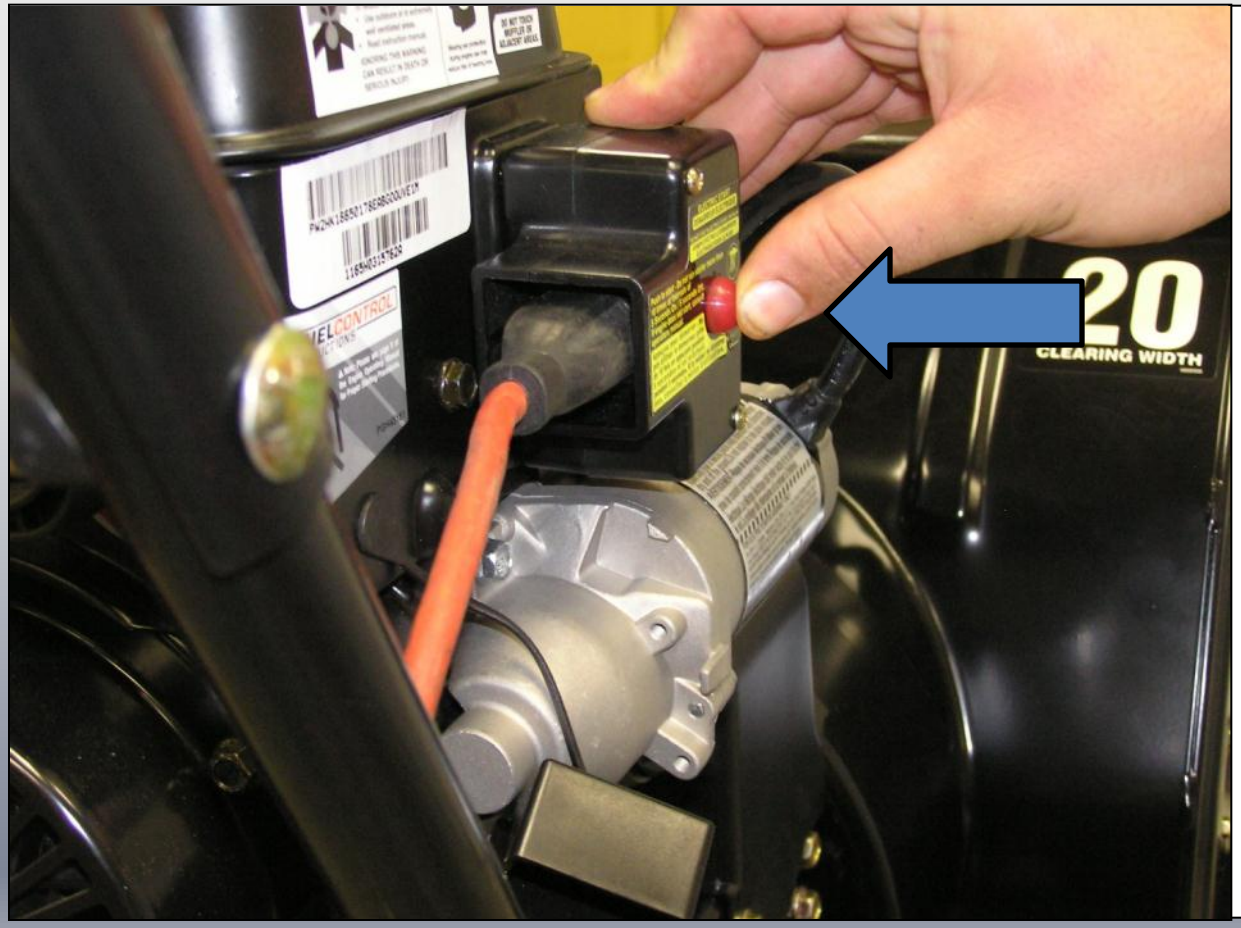

Press and hold starter button.

Note: Do not hold the electric starter button down for more than 5 seconds. Wait at least 1 minute before additional starting attempts.

Starting Engine / Step H: Warm up

Allow the engine to warm up for approximately 30 seconds before slowly rotating Choke Knob to Run position.

Step Eleven: Stopping the Engine

To stop engine in an emergency, flip the Rocker Switch to the STOP position, OR Pull Safety Key from Engine.

Under normal conditions:

1. Push rocker switch to STOP position.
2. Pull safety key OUT.

Additional Resources

- Refer to Owners Manual and Engine Manual
- Contact Ariens Company

  www.ariens.com

  Phone: 920-756-4688

  E-mail: info@ariens.com
- For issues concerning engine, please contact LCT

  www.LCTUSA.com

  Phone: 800-558-5402

© 2012 The Ariens Company. All rights reserved.